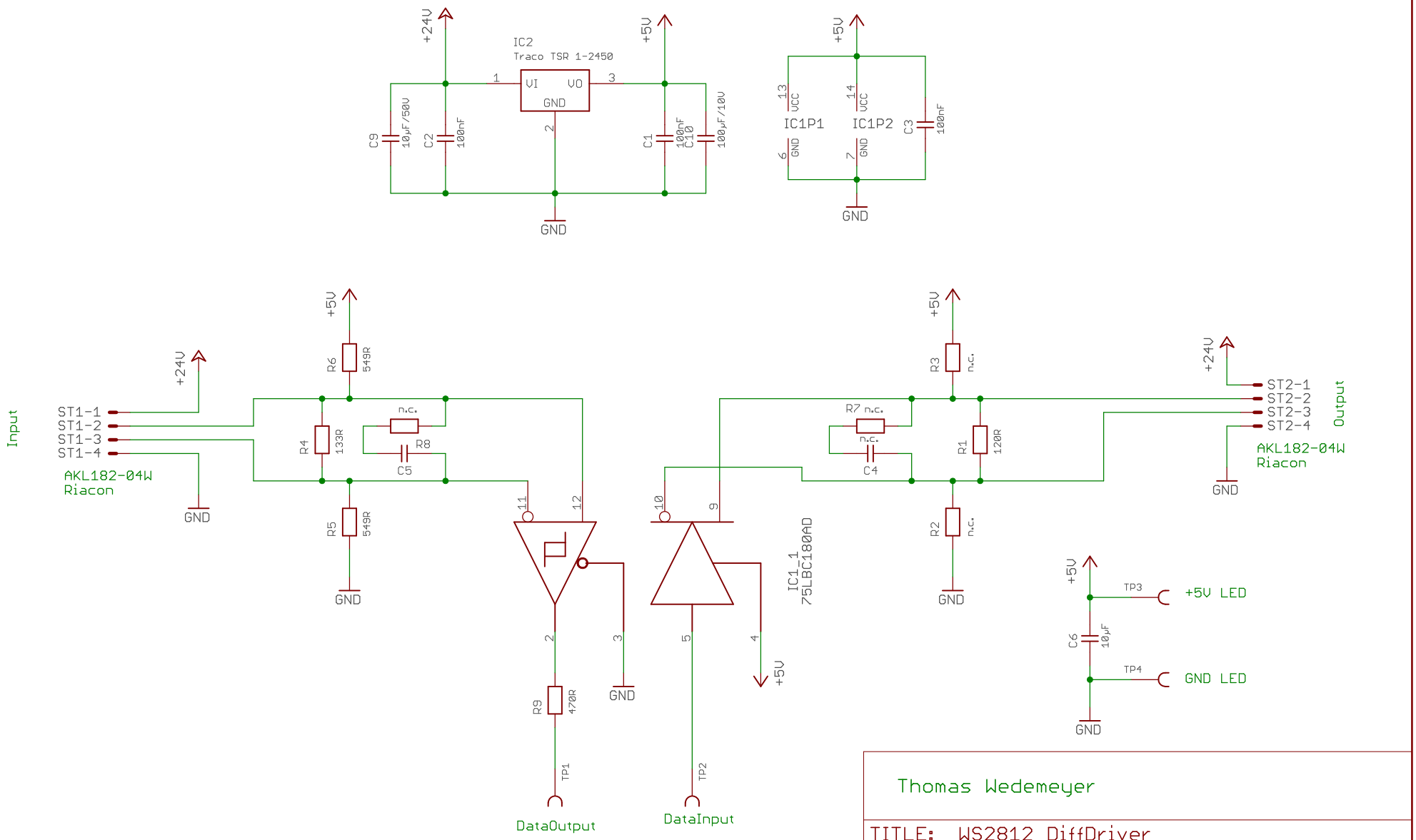

Thomas Wedemeyer

TITLE: WS2812_DiffDriver

Document Number: Gartenlampe

REV: 1.1

Date: 31.01.2022 12:17

Sheet: 1/1